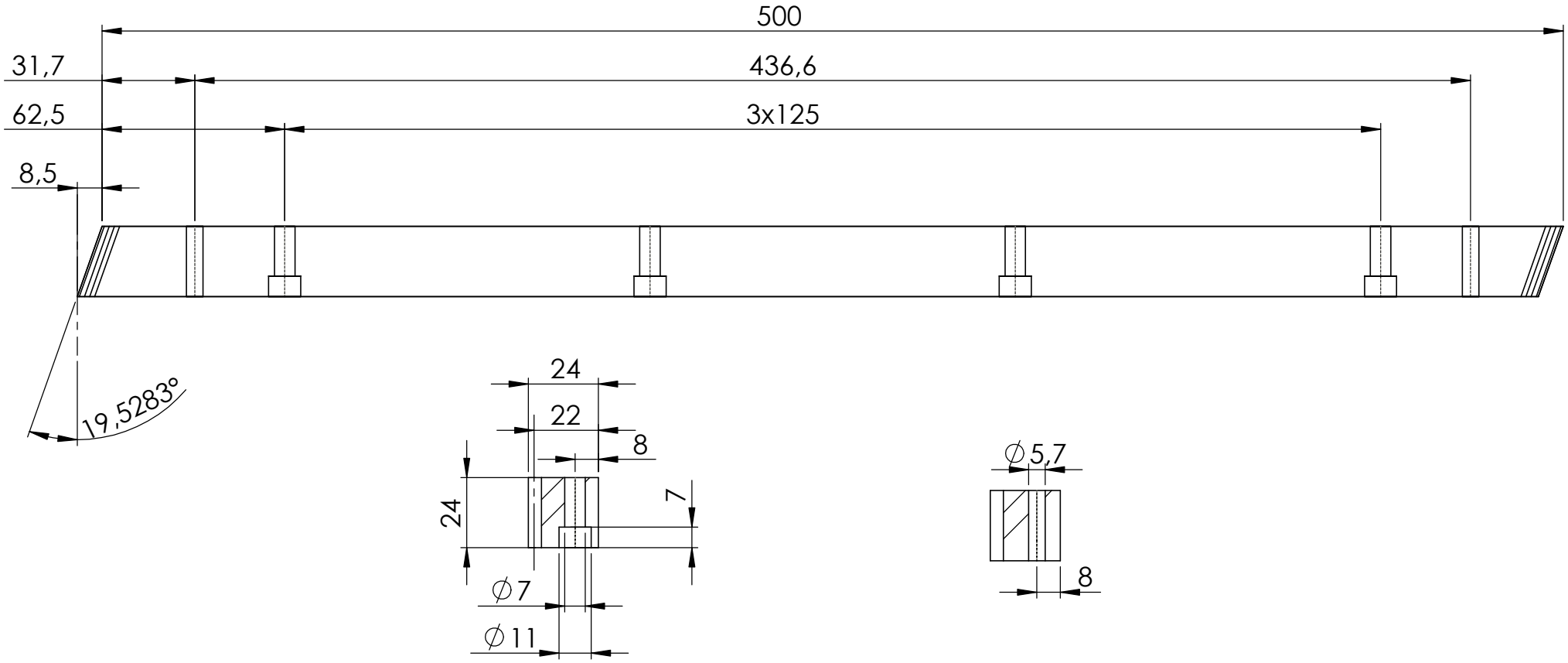

Module : 2
Helix angle (right hand) :19°31'42"
Tooth hardness : 50-55 HRC
Material : C45
Teeth ground to DIN 7 precision class

Matériau: C45	Masse:	
TITRE: Helical Rack M2-L500-DIN7		
RECKON Innovation needs performance	No. DE PLAN M2-HAI7-500-H1	Echelle 1:2
		A4
		FEUILLE 1 SUR 1