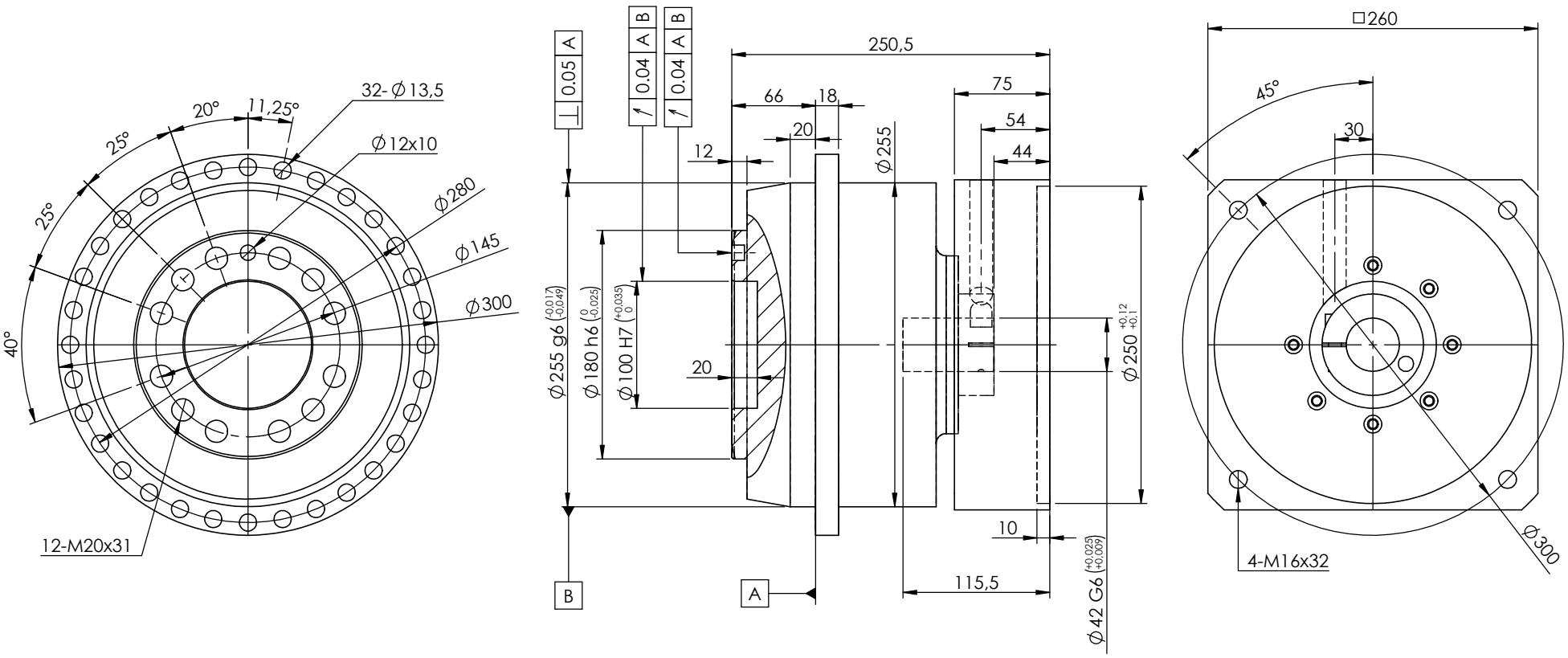

A bushing will be supplied if your motor shaft is smaller than ø42mm

For ratings and other technical data please refer to www.reckondrives.com

RECKON®
Innovation needs performance

Drawing n°

UCHT-255-L1G-F-42-F180-020

ULTIMATE-CI-HT-255 - 1 stage (Ratios 4 or 5,5)

with adaptating plate ø42x115,5-250-300-M16

Size	Date	Designed by
A4	01/28/2026	L. Bonnassieux